CEMLINE CORPORATION
P.O. Box 55
Cheswick, Pennsylvania 15024

724-274-5430
Fax: 724-274-5448

TOP

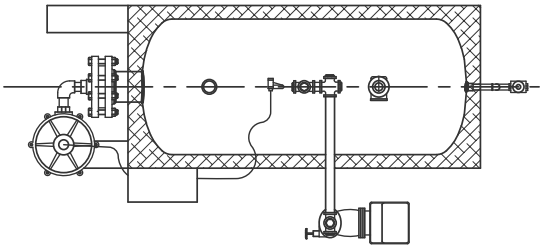

FRONT

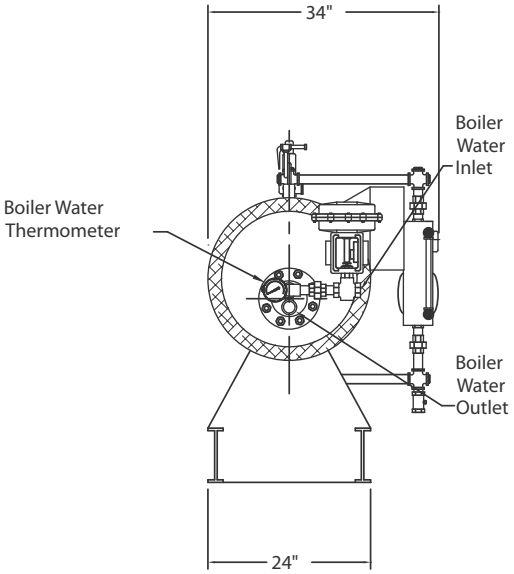

SIDE

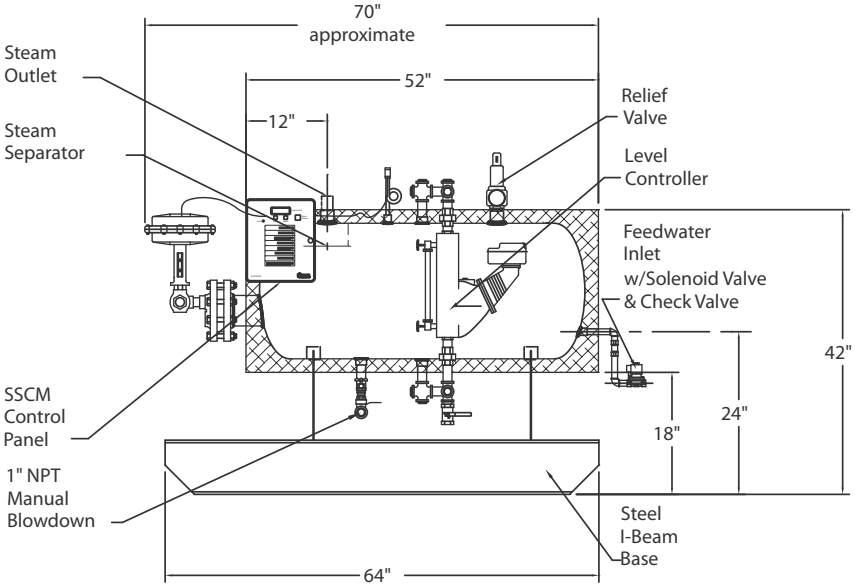

H60USG4XX-W
Energy Source - Boiler Water